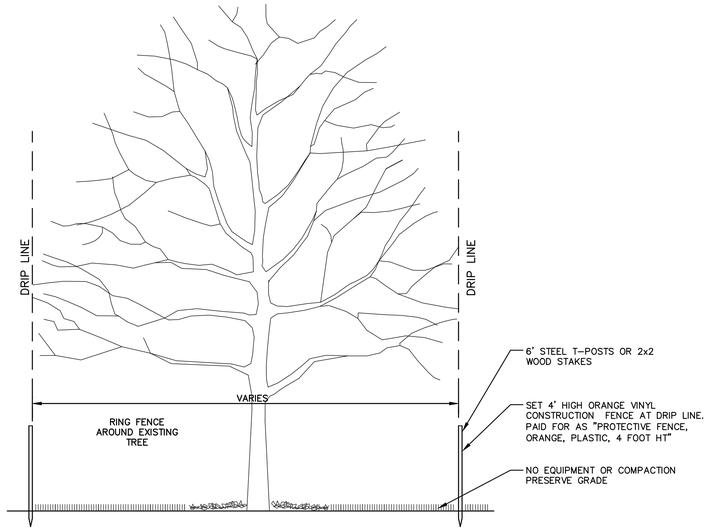

TREE PROTECTION DETAIL

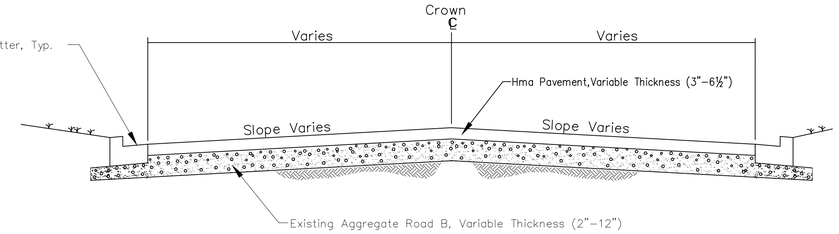

Existing Typical Roadway Section

Russell, Russett, Redeemer, Hewett

N.T.S.

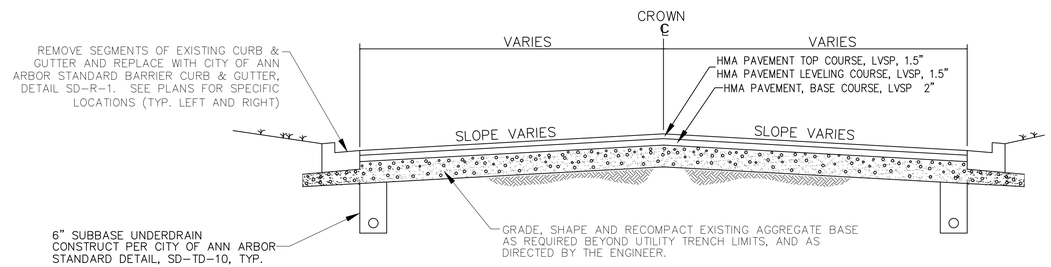

PROPOSED TYPICAL ROADWAY SECTION

RUSSELL, RUSSETT, REDEEMER, HEWETT

N.T.S.

RUSSELL, RUSSETT, REDEEMER, & HEWETT ROADS - HMA APPLICATION ESTIMATE					
HMA MIX	RATE OF APPLICATION	THICKNESS (INCHES)	AWI (MIN.)	BINDER	LOCATION/NOTES
LVSP	165 LB/SYD	1.5	260 (TOP COURSE)	PG 58-28	LEVELING & TOP COURSES
LVSP	220 LB/SYD	2.0		PG 58-28	BASE COURSE
Bond Coat SS-1h	0.05-015 GAL/SYD	-	-	-	INCLUDE IN COST OF HMA ITEM

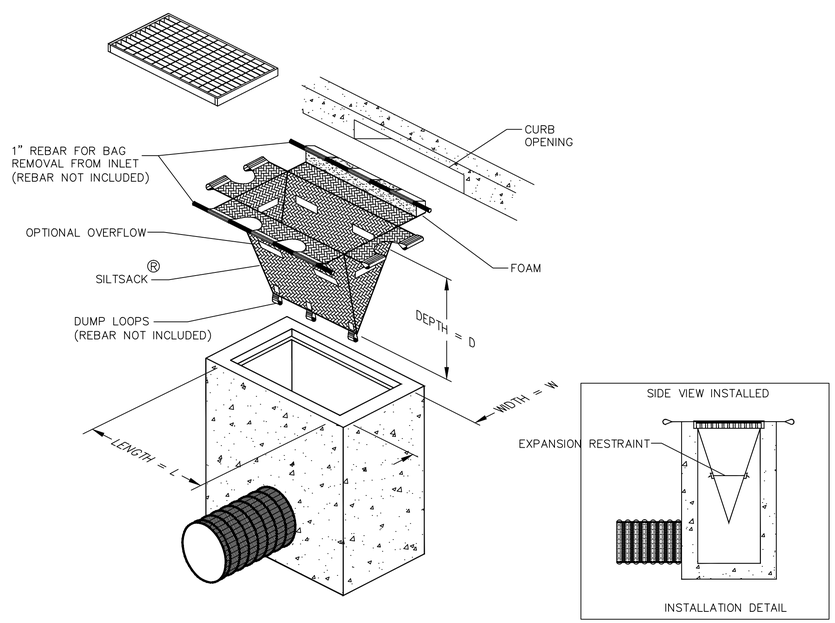

INLET FILTER (MODIFIED)

NOT TO SCALE

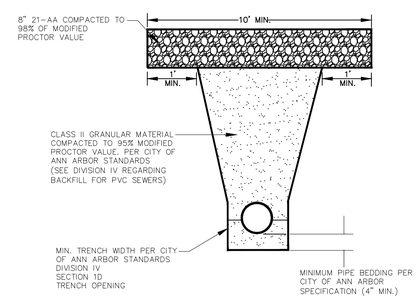

NOTE: DENSITY TESTING PER CITY OF ANN ARBOR SPECIFICATION

NOTE: TRENCH DETAILS SHOW TYPE OF BACKFILL AND SURFACE RESTORATION ONLY.

NOTE: ALL TRENCHING TO CONFORM TO ALL APPLICABLE M.I.O.S.H.A. STANDARDS

NOTE; ALL BACKFILL, INCLUDING SAND, AGGREGATES, AND TOP SOIL, SHALL BE INCLUDED IN THE APPROPRIATE PAY ITEM FOR WATER MAIN PIPE.

UTILITY TRENCH – TYPE 1 MODIFIED

NOT TO SCALE

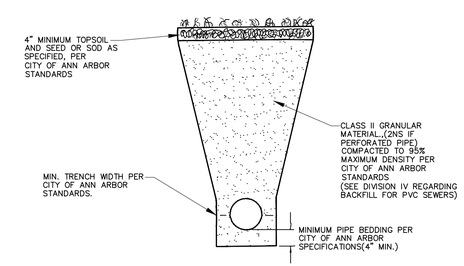

NOTE: DENSITY TESTING PER CITY OF ANN ARBOR SPECIFICATION

NOTE: TRENCH DETAILS SHOW TYPE OF BACKFILL AND SURFACE RESTORATION ONLY.

NOTE: ALL TRENCHING TO CONFORM TO ALL APPLICABLE M.I.O.S.H.A. STANDARDS

NOTE; ALL BACKFILL, INCLUDING SAND, AGGREGATES, AND TOP SOIL, SHALL BE INCLUDED IN THE APPROPRIATE PAY ITEM FOR WATER MAIN PIPE.

UTILITY TRENCH – TYPE VI MODIFIED

NOT TO SCALE

REV.	DESCRIPTION	DATE	DRAWN	CHECKED
04	ADDENDUM 2	05/04015	DAD	DAD
03	ADDENDUM 1	05/01/15	JKA	DAD
02	POST MDEQ 2015 REVIEW	03/18/15	JKA	DAD
01	EBERWHITE EXTENSION	02/26/15	CEC, JKA	DAD
00	MDEQ PERMIT REVIEW COMMENTS	07-22-14	ES,DPF	DAD

Know what's below. Call before you dig.

CITY OF ANN ARBOR
PUBLIC SERVICE
301 EAST HURON STREET
P.O. BOX 8647
ANN ARBOR, MI 48107-8647
(734) 794-6410
www.a2gov.org

PROJECT MANAGEMENT - PUBLIC SERVICES - CITY OF ANN ARBOR

HEWETT DR, RUSSELL RD, RUSSETT RD & REDEEMER AVE WATER MAIN REPLACEMENT

ROAD SECTION AND TRENCH DETAILS

SCALE : NTS

DRAWING No. 20130344

SHEET No. 4 OF 30

S:\Project Management\Design\2014029 HRRR WM Ph II\Plan Production\Primary\20140290ET(TRENCH).dwg Dwg Created: 25-Feb-14 – _o2 standard bw.stb – Plot Date: 4-May-15